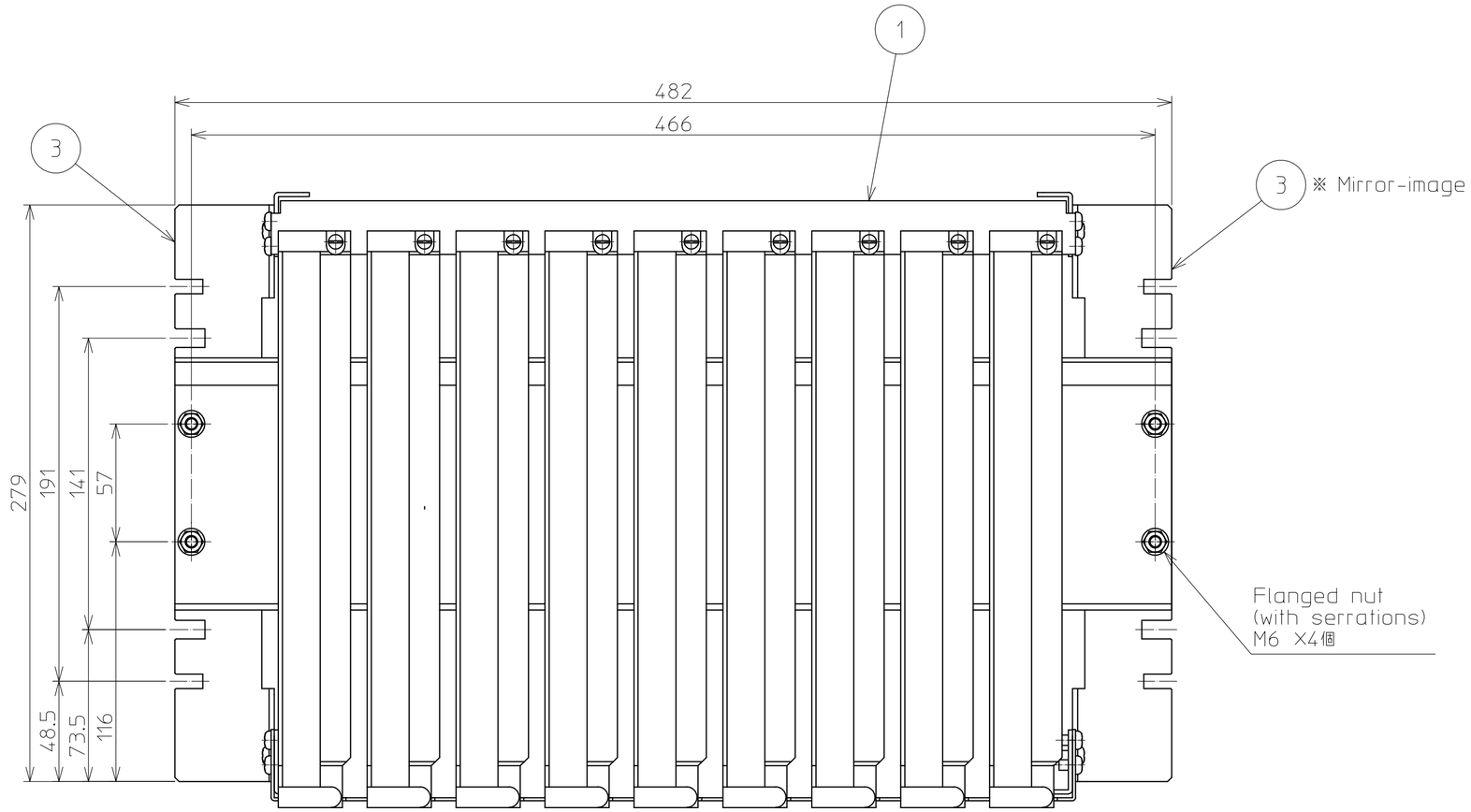

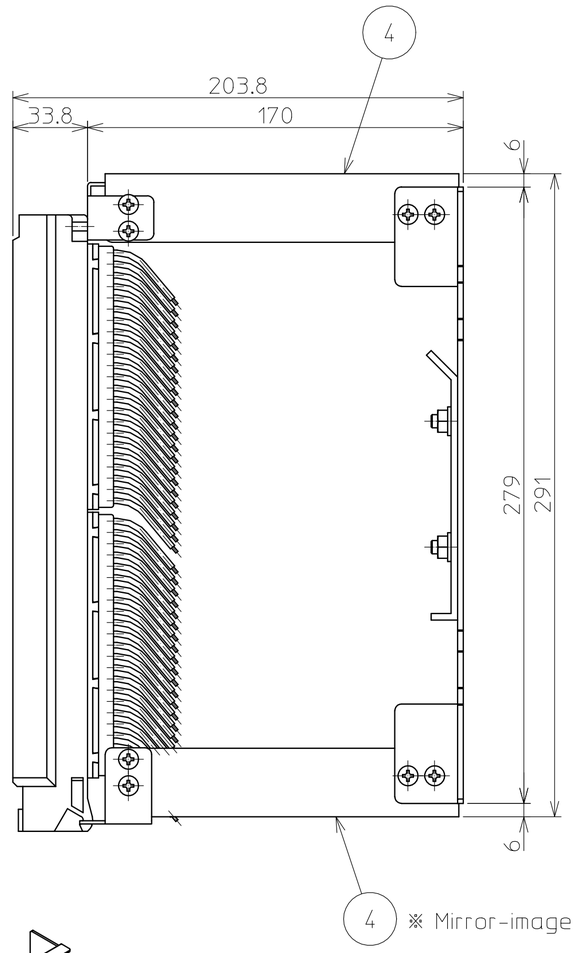

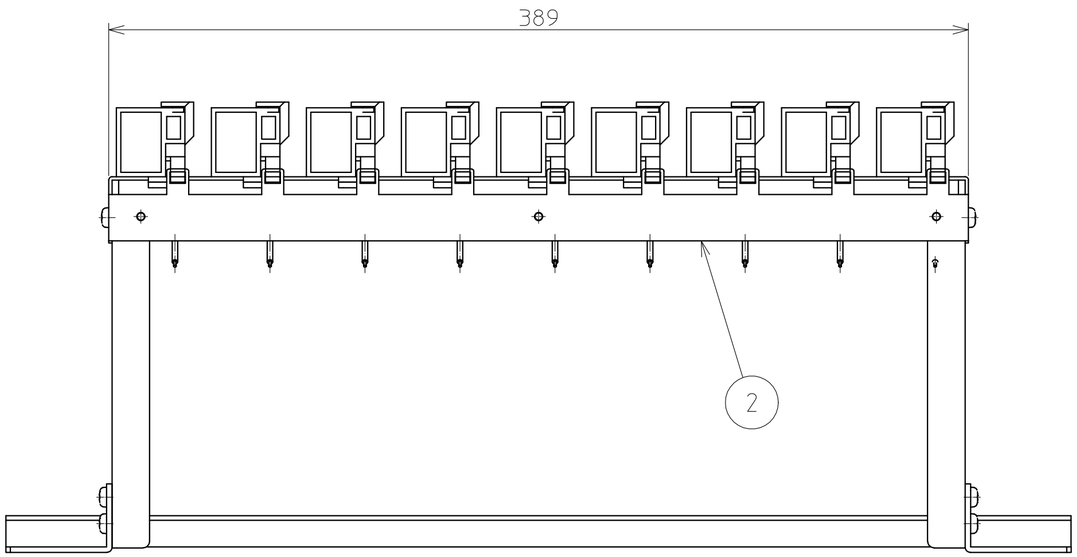

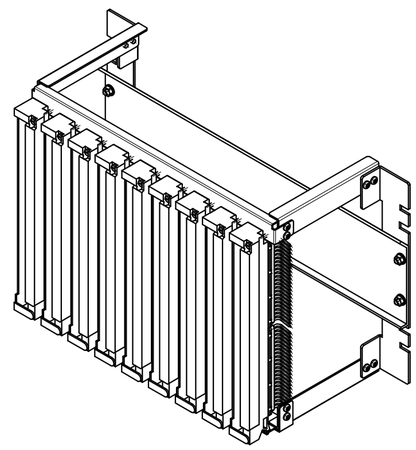

1:5

Eifer Electro Firma
株式会社アイファ電気商会
www.eifer.co.jp
info@eifer.co.jp

	Assembly drawing	1					
	Parts name	Quantity					
COSTOMER		DATE '16.5.31	ORDER.NO. PD0063	TITLE ES115Braket_Standard			
VENDOR		SCALE 1 : 2			REVISED DATE		
Eifer Elecktro Firma Co.,Ltd Support by Ripula Co.,Ltd		DESIGNED Sekiyama	DRAFT Nakamura	DWG.NO. PD0063-200	REV. A	PAGE. 1/1	FORM SIZE. A2

Finish	100 ( )

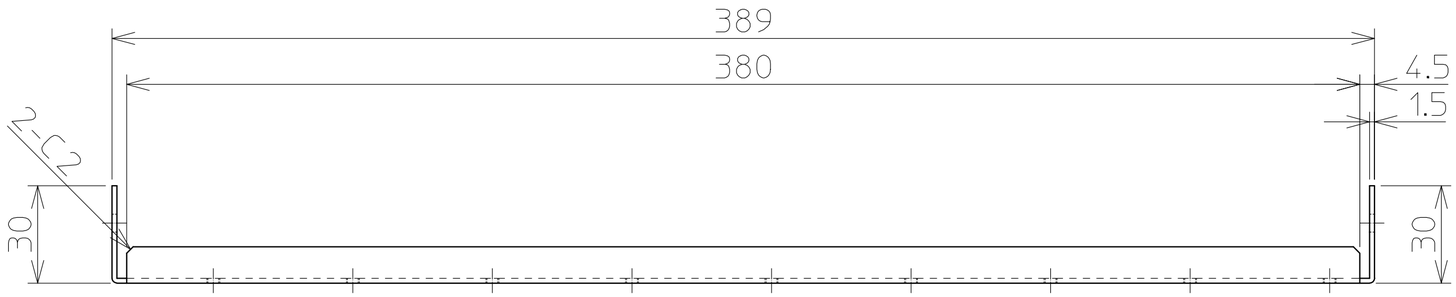

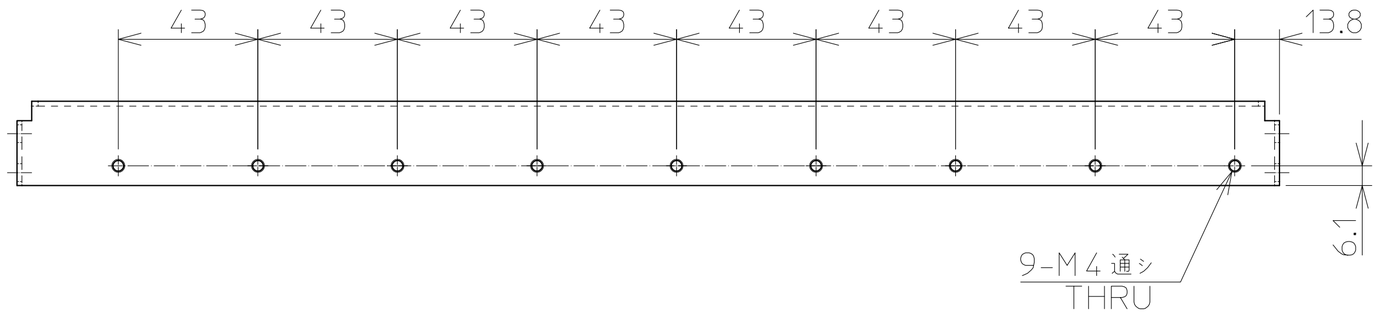

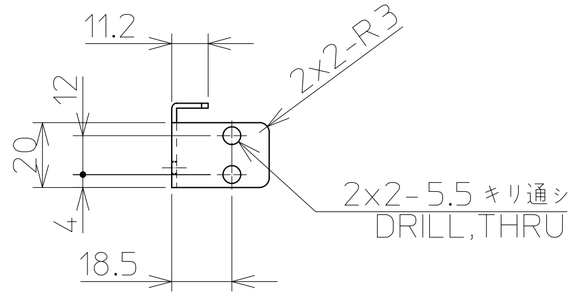

注記/Notes

・本部品は製品として販売されるため、
1.エッジ部はすべて、糸面取りのこと(指や配線を切らないように)
2.スパッタ除去及び、脱脂、洗浄を行うこと

・In order to this part is sold as a product,
1. All edge portion, that of the thread chamfer (not to cut your finger and wiring)
2. sputter removal and, by performing degreasing and washing

・指示なき曲げ部は、最小半径Rのこと
・ Unless otherwise indicated, bending section, the smallest radius R

Eifer Electro Firma
株式会社アイファ電気商会
www.eifer.co.jp
info@eifer.co.jp

	Upper frame	1		
	Parts name	Quantity		
COSTOMER		DATE '16.5.31	ORDER.NO. PD0063	TITLE ES115Braket_Standard
VENDOR		SCALE 1 : 2		REVISED / DATE
	Eifer Elecktro Firma Co.,Ltd Support by Ripula Co.,Ltd	DESIGNED Sekiyama	DRAFT Nakamura	DWG.NO. PD0063-201 / REV. A / PAGE. 1/1 / FORM SIZE. A3

Material	SUS304 t=1.5
Heat treatment	-
Surface treatment	-

Finish ▽100 ( )

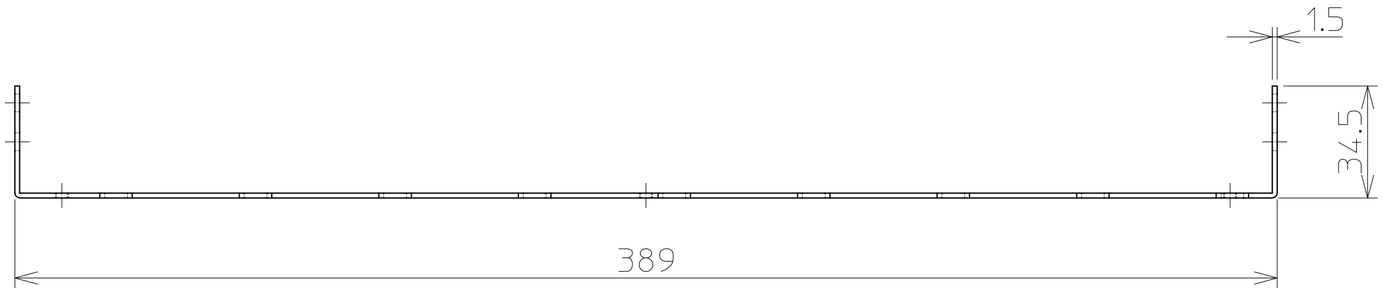

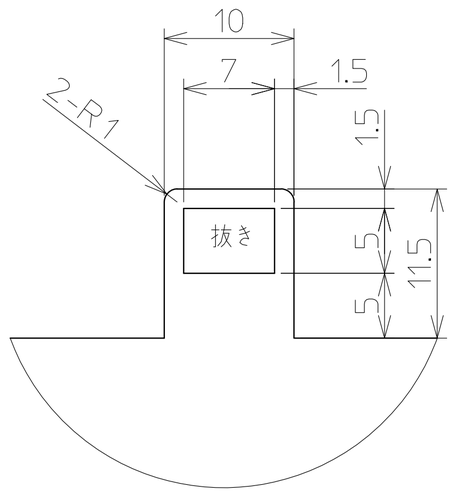

VEW A x9
2:1

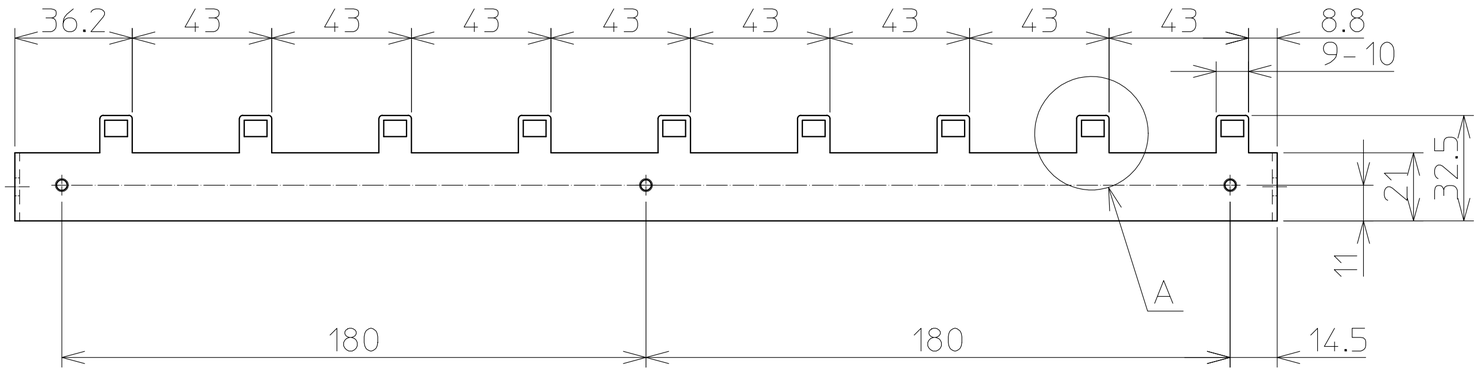

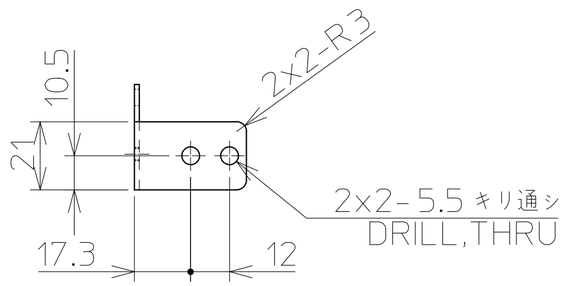

注記/Notes
・本部品は製品として販売されるため、
1.エッジ部はすべて、糸面取りのこと(指や配線を切らないように)
2.スパッタ除去及び、脱脂、洗浄を行うこと
・In order to this part is sold as a product,
1. All edge portion, that of the thread chamfer (not to cut your finger and wiring)
2. sputter removal and, by performing degreasing and washing
・指示なき曲げ部は、最小半径Rのこと
・ Unless otherwise indicated, bending section, the smallest radius R

Eifer Electro Firma
株式会社アイファ電気商会
www.eifer.co.jp
info@eifer.co.jp

Material	SUS304 t=1.5		
Heat treatment	-		
Surface treatment	-		

	Lower frame	1		
	Parts name	Quantity		
COSTOMER		DATE '16.5.31	ORDER.NO. PD0063	TITLE ES115Braket_Standard
VENDOR		SCALE 1 : 2		REVISED / DATE
Eifer Elecktro Firma Co.,Ltd Support by Ripula Co.,Ltd		DESIGNED Sekiyama	DRAFT Nakamura	DWG.NO. PD0063-202 / REV. A / PAGE. 1/1 / FORM SIZE. A3

Finish	100 ( )

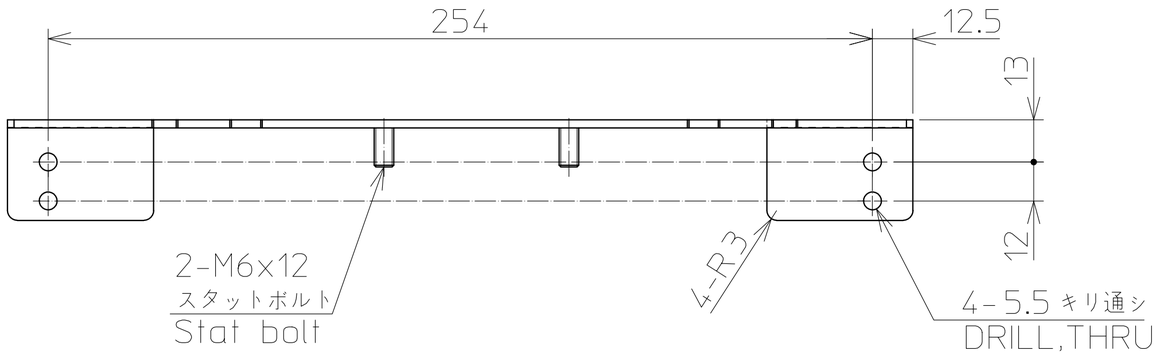

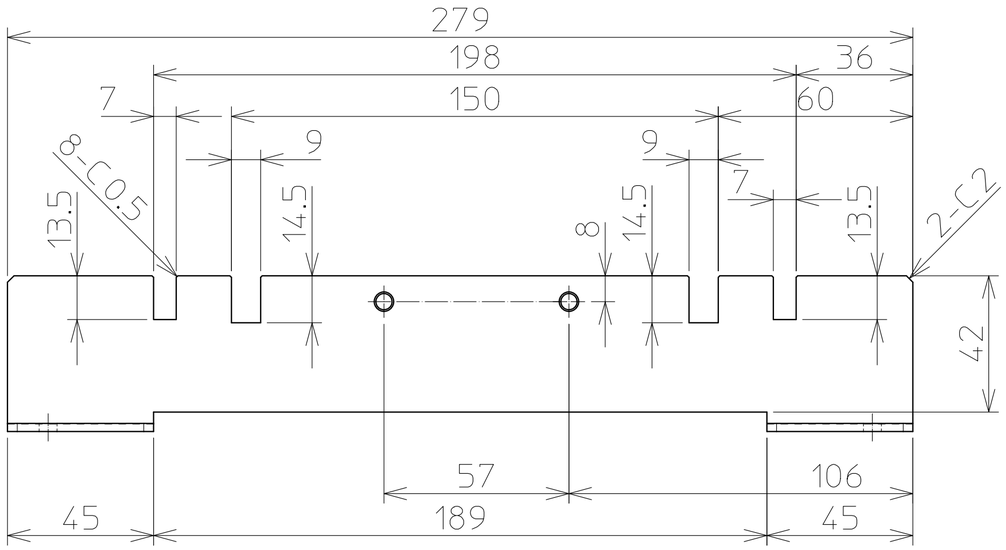

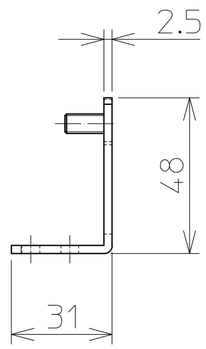

注記/Notes

・本部品は製品として販売されるため、
1.エッジ部はすべて、糸面取りのこと(指や配線を切らないように)
2.スパッタ除去及び、脱脂、洗浄を行うこと

・In order to this part is sold as a product,
1. All edge portion, that of the thread chamfer (not to cut your finger and wiring)
2. sputter removal and, by performing degreasing and washing

・指示なき曲げ部は、最小半径Rのこと
・ Unless otherwise indicated, bending section, the smallest radius R

本図通りの物…1個 This Parts…1
勝手違いの物…1個 Mirror-image Parts…1

Eifer Electro Firma
株式会社アイファ電気商会
www.eifer.co.jp
info@eifer.co.jp

	Bracket base	L1 / R1		
	Parts name	Quantity		
COSTOMER		DATE '16.5.31	ORDER.NO. PD0063	TITLE ES115Braket_Standard
VENDOR		SCALE 1 : 2		REVISED / DATE
	Eifer Elecktro Firma Co.,Ltd Support by Ripula Co.,Ltd	DESIGNED Sekiyama	DRAFT Nakamura	DWG.NO. PD0063-203 / REV. A / PAGE. 1/1 / FORM SIZE. A3

Material	SUS304 t=2.5
Heat treatment	-
Surface treatment	-

Finish	▽100 ( )

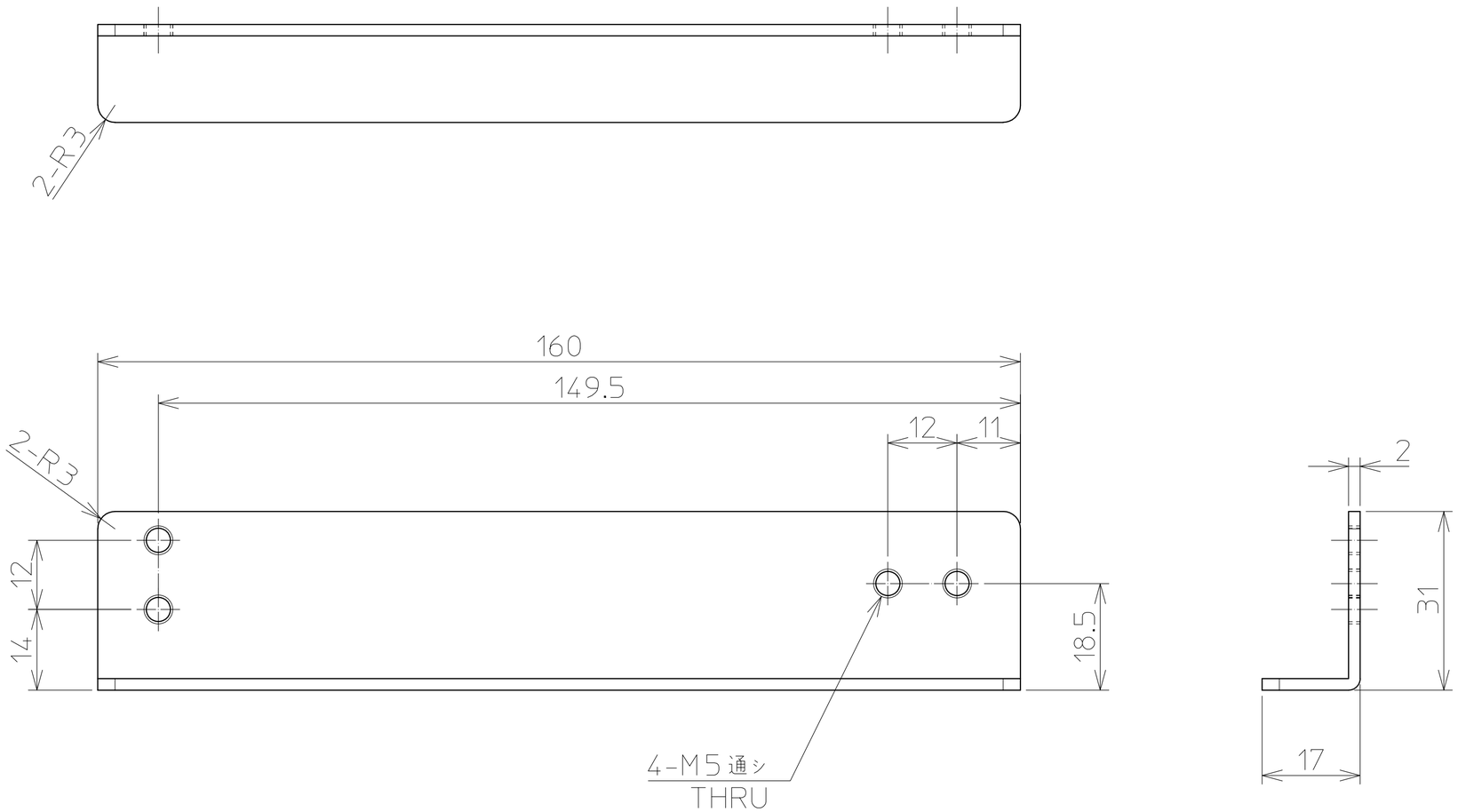

注記/Notes

・本部品は製品として販売されるため、
1.エッジ部はすべて、糸面取りのこと(指や配線を切らないように)
2.スパッタ除去及び、脱脂、洗浄を行うこと

・In order to this part is sold as a product,
1. All edge portion, that of the thread chamfer (not to cut your finger and wiring)
2. sputter removal and, by performing degreasing and washing

・指示なき曲げ部は、最小半径Rのこと
・ Unless otherwise indicated, bending section, the smallest radius R

本図通りの物…2個 This Parts…2
勝手違いの物…2個 Mirror-image Parts…2

Material	SUS304 t=2
Heat treatment	-
Surface treatment	-

	Flame	L2 / R2		
	Parts name	Quantity		
COSTOMER		DATE '16.5.31	ORDER.NO. PD0063	TITLE ES115Braket_Standard
VENDOR		SCALE 1 : 1		REVISED / DATE
Eifer Elecktro Firma Co.,Ltd Support by Ripula Co.,Ltd		DESIGNED Sekiyama	DRAFT Nakamura	DWG.NO. PD0063-204 / REV. A / PAGE. 1/1 / FORM SIZE. A3

Eifer Elecktro Firma
株式会社アイファ電気商会
www.eifer.co.jp
info@eifer.co.jp